THIS DOCUMENT IS THE PROPERTY OF KEYSTONE ELECTRONICS CORP. AND SHALL NOT BE REPRODUCED, DISTRIBUTED OR USED AS A BASIS FOR MANUFACTURE WITHOUT PRIOR WRITTEN PERMISSION FROM KEYSTONE ELECTRONICS CORP.

ACTUAL SIZE

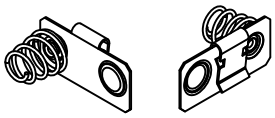

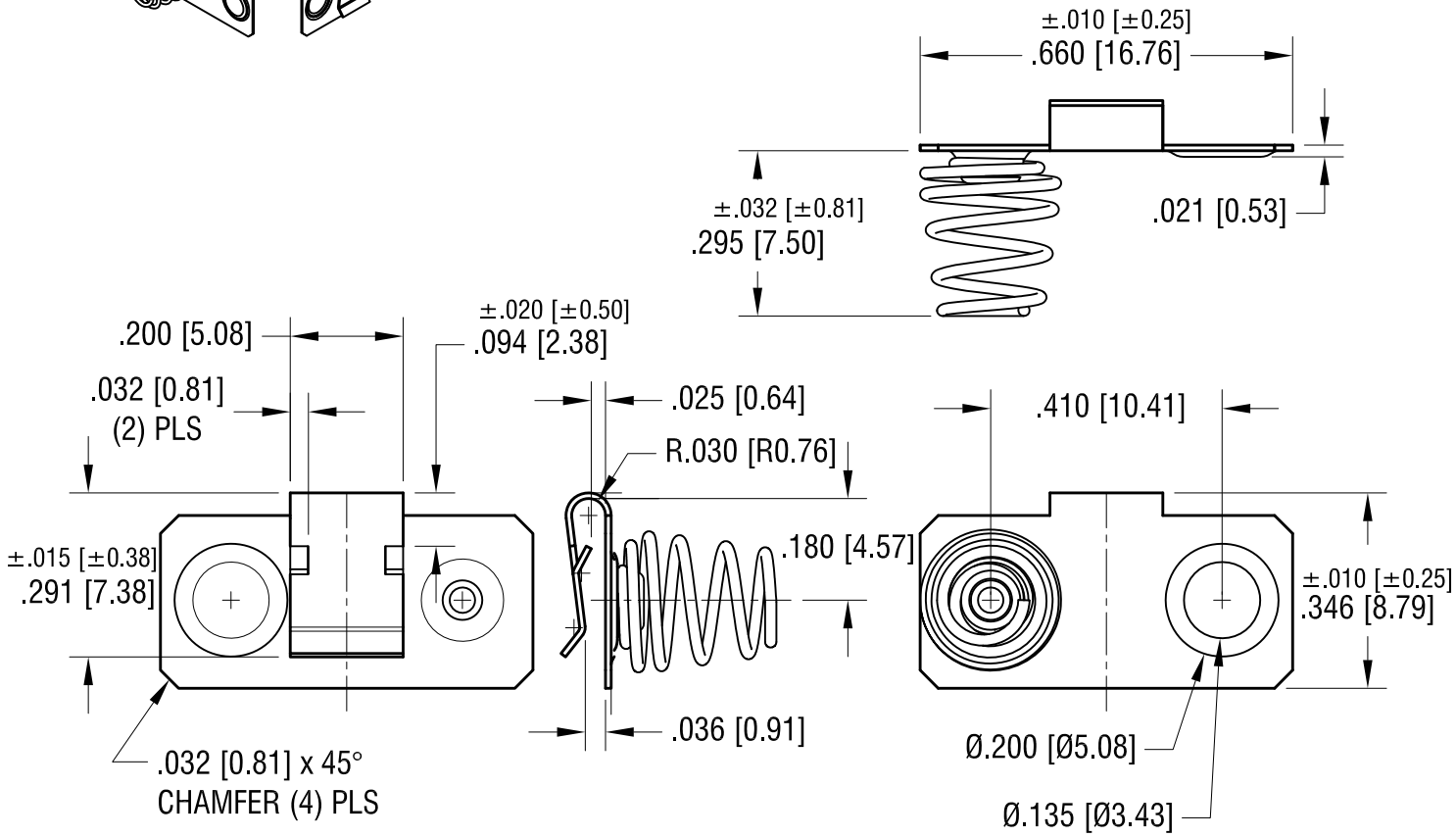

1. BASE:
   MAT'L - .010 [0.25] TH'K SPRING STEEL
2. SPRING CONTACT:
   MAT'L - .020 [0.50] DIA. MUSIC WIRE
3. SPRING EYELETED TO BASE

DATE	DESCRIPTION	REV.

KEYSTONE ELECTRONICS CORP.

www.keyelco.com • NEW HYDE PARK, NY 11040 • Tel (516) 328-7500

PART NAME: DUAL SPRING CONTACT, 'AAA' - 'AAAA'			
MATERIAL: AS NOTED			
FINISH: NICKEL PLATE	DRN BY: NT	DATE: 10.25.17	
	APP'D: LN	SCALE: 3X	
TOLERANCES INCH [MM] DECIMAL ± .005 [± 0.13] ANGULAR ± 1° UNLESS OTHERWISE SPECIFIED	CODE: C	DWG NO. 299	