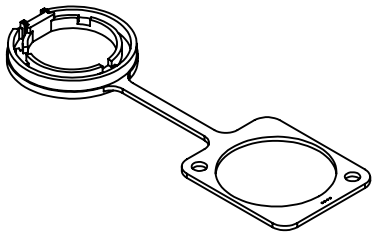

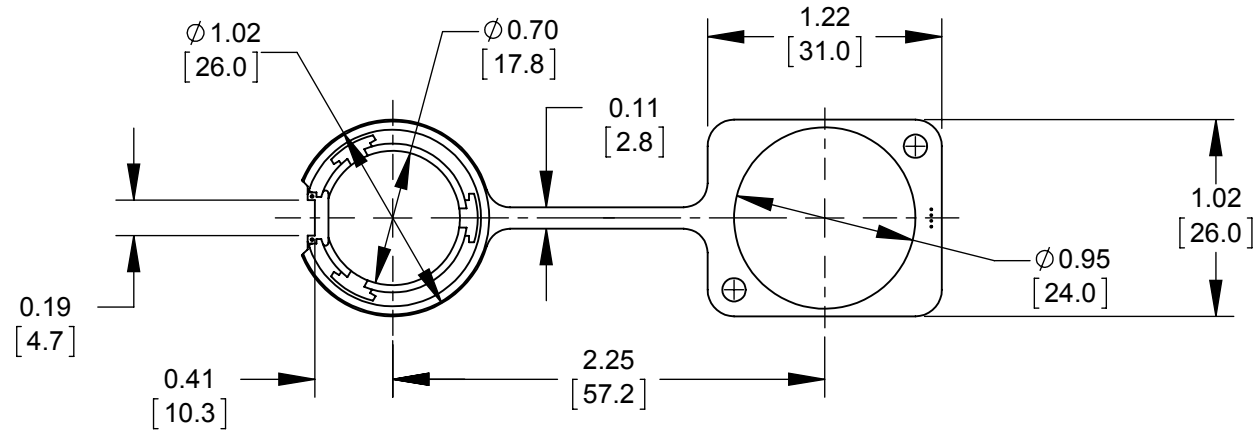

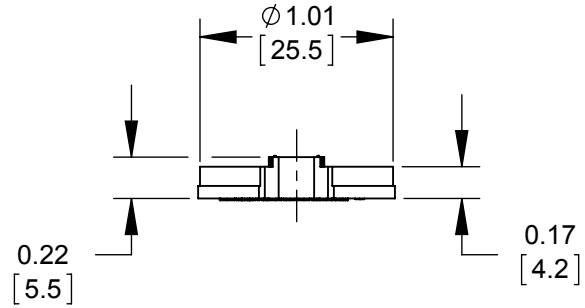

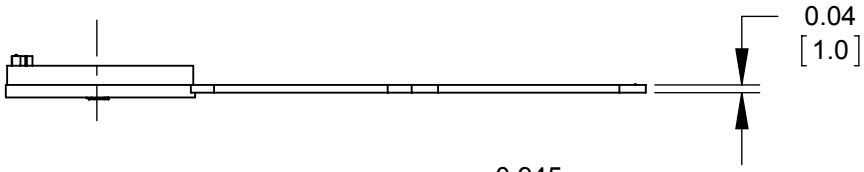

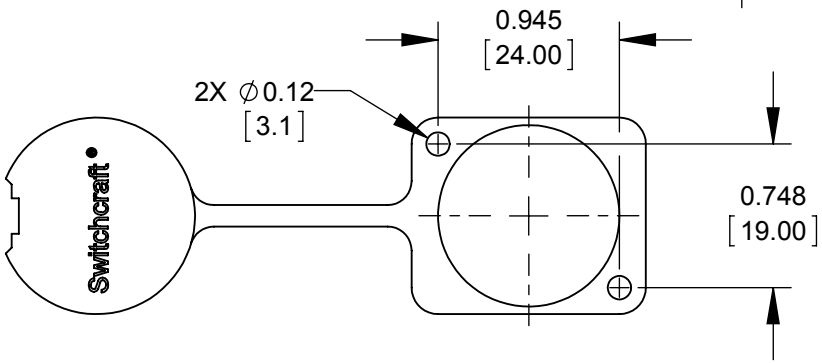

NOTES:

1. MATERIAL - BLACK THERMOPLASTIC ELASTOMER.
2. THIS PART IS ROHS COMPLIANT.

CUSTOMER DRAWING

REV	ECO NUMBER	DATE	BY	APVD
A	RELEASED 27511	5-12-15	SRC	TJK

REVISIONS

UNLESS OTHERWISE SPECIFIED

1. ALL DIMENSIONS IN INCHES
   - TWO PLACE DECIMALS ±0.02
   - THREE PLACE DECIMALS ±0.005

DO NOT SCALE DRAWING

THIS DRAWING DESCRIBES A DESIGN CONSIDERED PROPRIETARY IN NATURE, DEVELOPED AND MANUFACTURED BY SWITCHCRAFT INC. AND IS RELEASED ON A CONFIDENTIAL BASIS FOR IDENTIFICATION PURPOSES ONLY.

SIZE	WIDTH	MULT	LBS/M	TEMPER

FINISH
SPEC No.

MATERIAL SEE NOTES
SPEC No.

FIRST USED ON

SCALE 1:1

DATE DRAWN	BY	CHKD	APVD
10-13-14	SRC	10-13-14 SRC	8-12-15 TJK

Switchcraft®

SHEET 1 OF 1

NAME "E" SERIES FEMALE CAP

PART No. CAPFE

REV A

SolidWorks CAD File

A